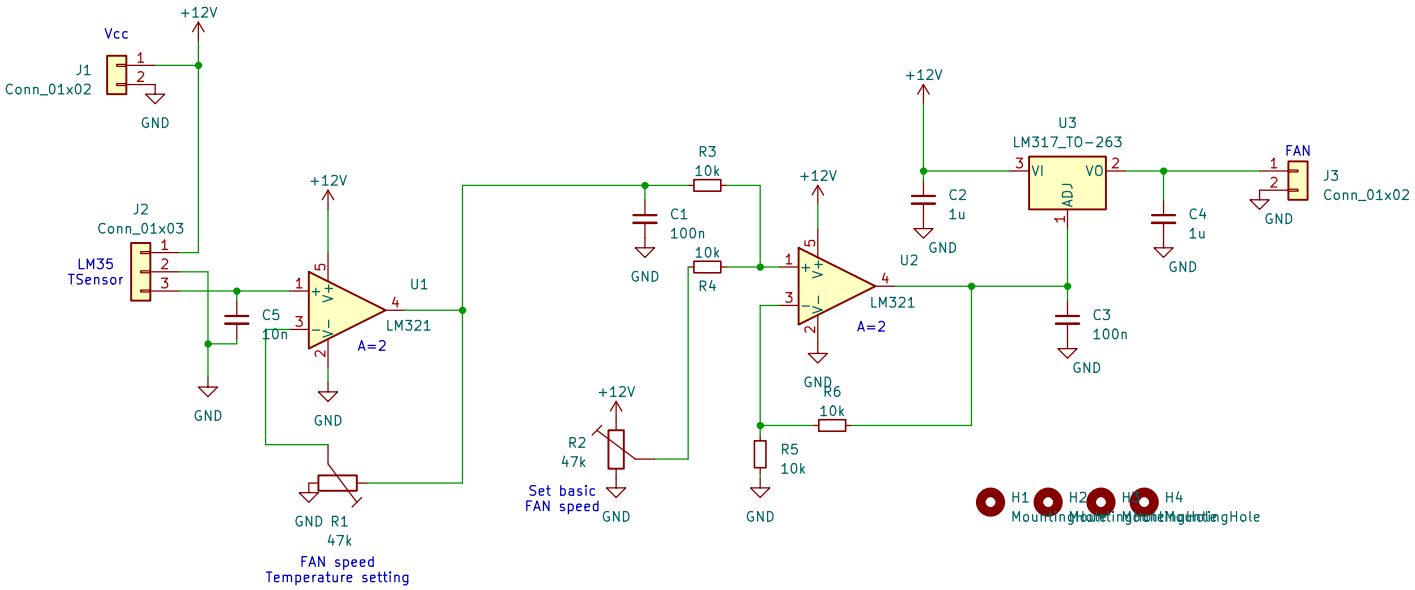


www.oh8lq.com

Sheet: /

File: lm317_fan.kicad_sch

**Title: FAN speed control LM35**

| | | |
|---|---|---|
| Size: A4 | Date: 2025-01-10 | Rev: v1.0 |
| KiCad E.D.A. 8.0.7 | | Id: 1/1 |